INSTALLATION AND CARE GUIDE

WOODBRIDGE®

MODERN ONE PIECE TOILET : T0020/B0920

Compliance with the following codes & standard:

- 2015 Uniform Plumbing Code® (UPC)
- 2018 International Plumbing Code® (IPC)
- 2018 International Residential Code® (IPC)
- CSA B45.5 / IAPMO Z124-2017- Plastic Plumbing Fixtures

ICC ES LISTED

SCC Accredited CB-P/S OCPS Accrédité CCN

ANSI ACCREDITED ISO/IEC 17065 Product Certification Body #1000

ICC PREFERED EDUCATION PROVIDER

ICC INTERNATIONAL CODE COUNCIL

Customer Service Phone: 562-774-2284. (Monday - Friday 9 AM - 5 PM Pacific Time)
Or Email: help.woodbridge@gmail.com

092718 REV. 3

READ ALL INSTRUCTIONS BEFORE UNPACKING THE PRODUCT

INSTRUCTIONS THAT, IF IGNORED COULD RESULT IN DEATH OR SERIOUS INJURY CAUSED BY INCORRECT HANDLING OR INSTALLATION OF THE PRODUCT. THESE INSTRUCTIONS MUST BE OBSERVED FOR SAFE INSTALLATION.

CAUTION! TWO PERSON LIFT REQUIRED

2 PEOPLE ARE REQUIRED TO LIFT AND DURING ENTIRE INSTALLATION OF THIS PRODUCT

INSTALLATION OF THIS PRODUCTS BY AN INEXPERIENCED INSTALLER MAY RESULT PERSONAL INJURY OR DEATH!

We reserves the right to change, update, modify, alter, redesign this manual/product or its policies without prior notice!

We shall not be liable for any injuries or property damages in connection with this product during installation or use of this product!

This products must be installed by a fully insured and licensed plumber only. Installation of any our product by anyone other than fully insured and licensed plumber shall void limited warranty. We recommends that such licensed plumber have experience in the installation of products.

Limited warranty is void on any commercial installation

We are not responsible for local code compliance for this product. Building and plumbing codes may vary from state-to-state in accordance to your location. We are not resonsible for providing any compliance certifications.

Under no circumstances we are shall not be liable for any and all incidental damages sustained in connection with this product

Neither manufacture, nor distributor, nor retailer is responsible for water damage or flood caused due to use of this product.

Under no circumstances We shall not be liable for any and all fees, cost of installation/reinstallation/removal, subsequent damage or transportation in case of the product defect

TOILET COMPONENTS

During unpacking the product and prior to installation inspect your new product for any damages or missing parts. Do not attempt to install or operate the product if the product is damaged.

- Bowl with lid x 1
- Toilet Seat Set x 1
- Wax Ring x 1
- Mounting T-Bolt x 2
- The plastic piece x 2
- Plastic washer x 2
- bolt cap decoration x 2
- Mounting Screw x 2
- T-Bolt Nuts and Washers x 2

TOOLS REQUIRED FOR INSTALLATION

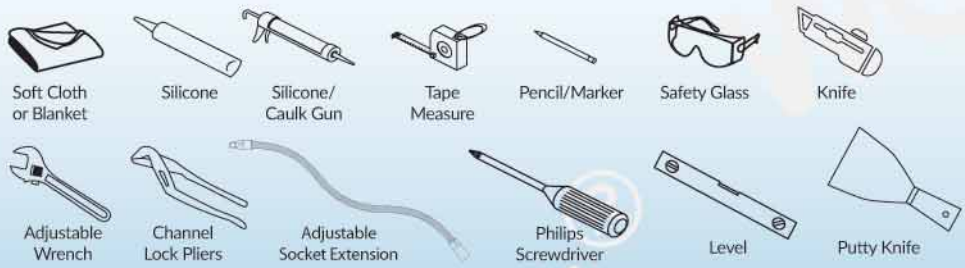

OTHER TOOLS MAY BE REQUIRED

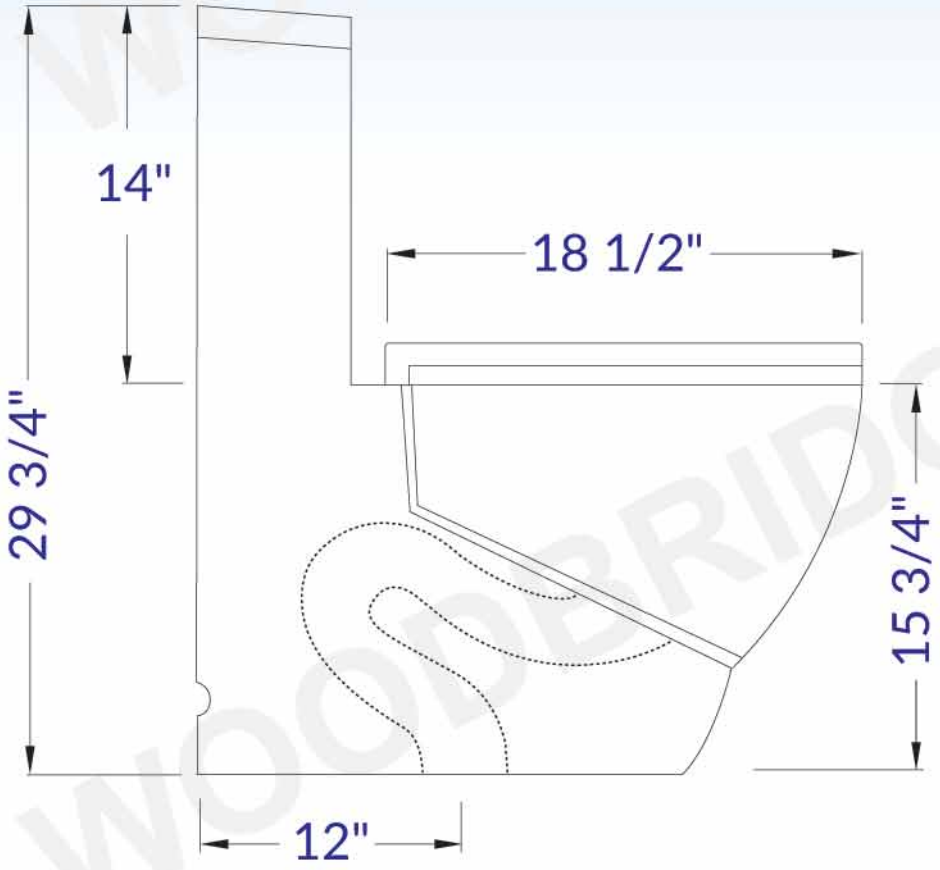

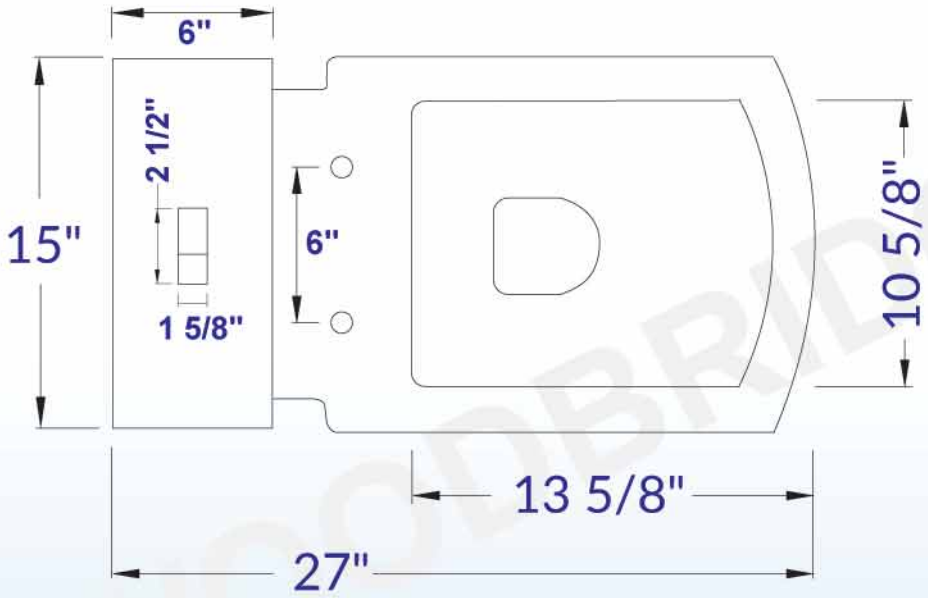

IMPORTANT INFORMATION

- Measurements are +3/8" and subject to change without notice
- Specifications & Configurations are subject to change without notice
- Pls measure toilet on-site before installation
- Please note that installer(s) must be certify or warranty will be voided.
- Measurements herein supersede all others published prior to purblication date shown below

WATER SUPPLY LOCATION & TECHNICAL INFORMATION

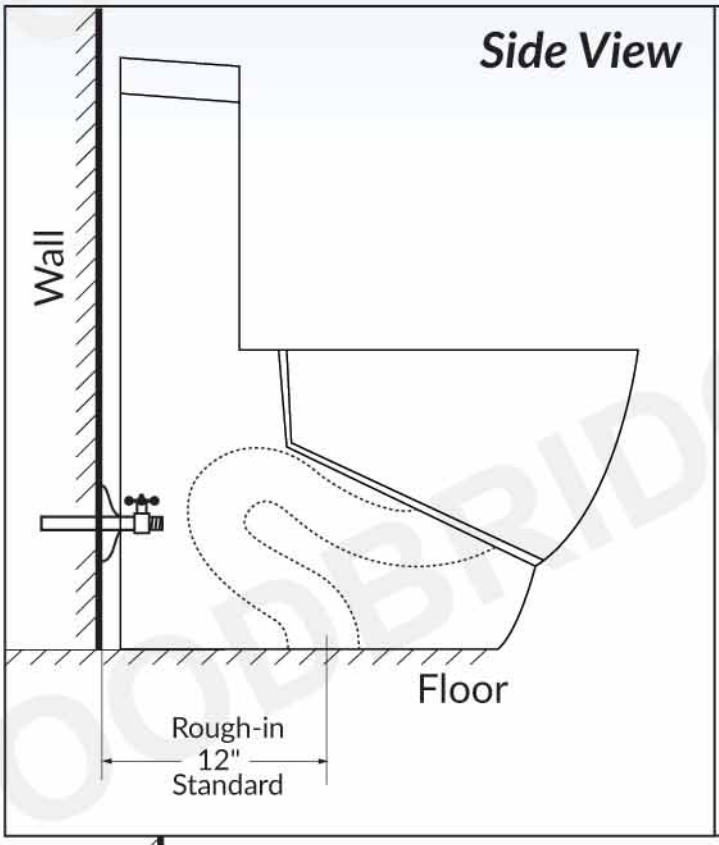

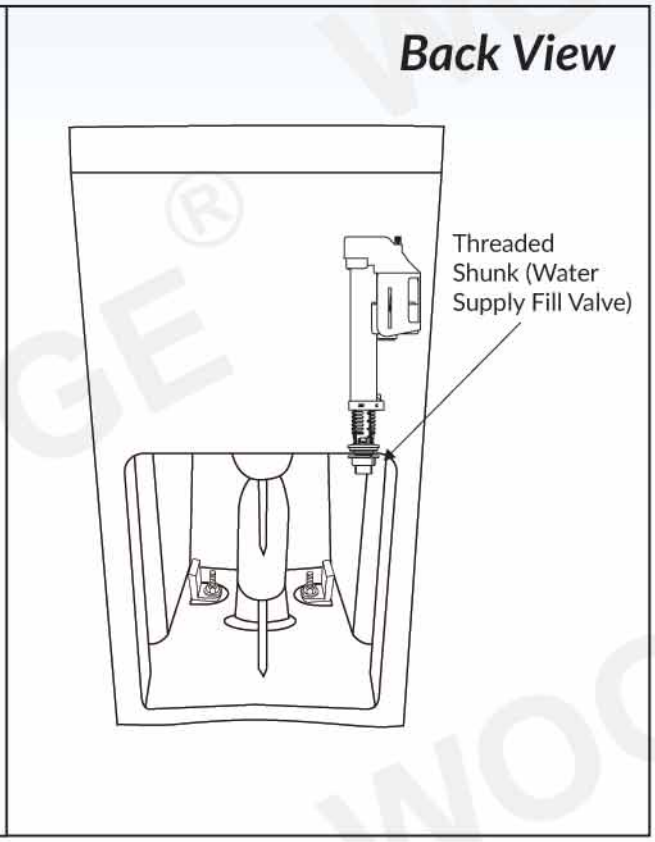

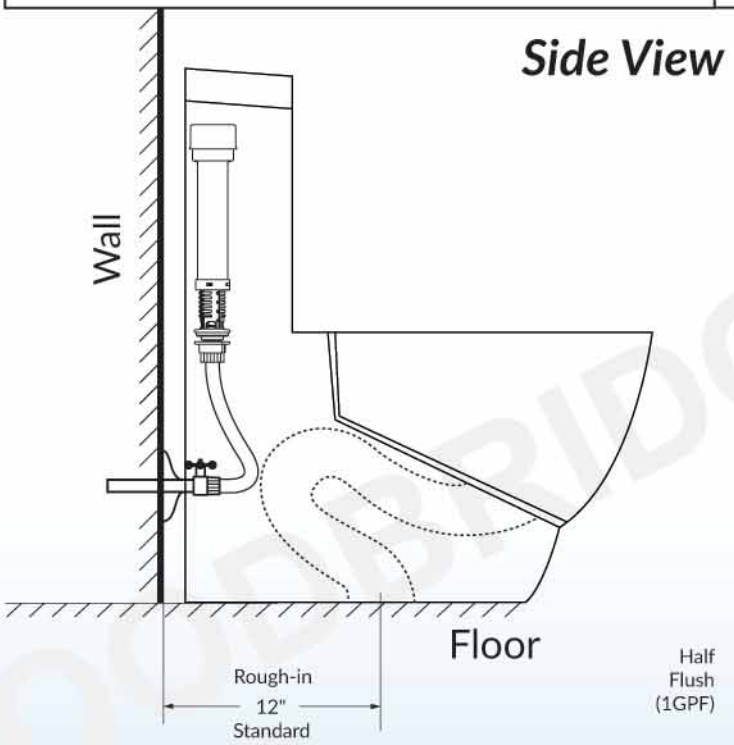

Half
Flush
(1GPF)

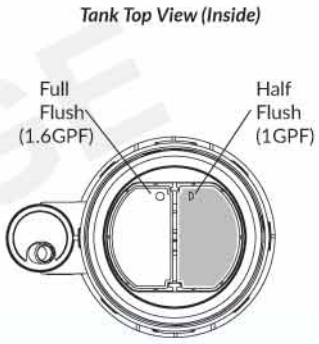

Flush GPF amount is factory set. No additional adjustment is required.

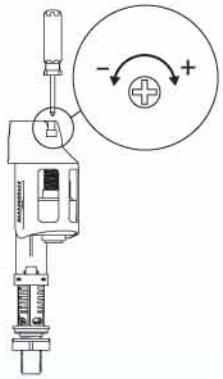

Adjust the water level in the toilet's tank if neccessary by rotating the adjustment screw to increase (+) or decrease (-) a level of water in the toilet's tank.

IMPORTANT INFORMATION

- Measurements are +3/8" and subject to change without notice
- Specifications & Configurations are subject to change without notice
- Pls measure toilet on-site before installation
- Please note that installer(s) must be certify or warranty will be voided.
- Measurements herein supersede all others published prior to purblication date shown below

IMPORTANT!
Shut off main water supply prior to installation!

REMOVE OLD TOILET

1. Shut off water supply line. If you do not have shut-off valve near the toilet shut off main water supply line.
2. Flush the old toilet and make sure that tank is empty.
3. Disconnect and remove water supply line connected to the toilet's tank.
4. Remove old toilet, bolts, nuts from the closet flange.
5. Clean closet flange area from old wax ring and putty sealant using putty knife from the base area.
6. Clean any remaining debris and wipe any water at the installation area
7. Temporarily plug flange on a floor with a flange plug or towel to prevent gasses from escaping

IMPORTANT! The mounting surface area must be clean, dry, and leveled prior to installation of the new toilet!

NOTE! Inspect the existing closet flange for damages. If damaged, replace it to new flange before proceeding to the installation

PREPARE CLOSET FLANGE

Make sure that rough-in is 12" by measuring the distance from the wall to the center of the closet flange.
See Figure 1

Step 1. Insert 2 floor bolts inside of the toilet flange
Step 2. Slide the closet bolts through the holes and align bolts horizontaly.
See Figure 2

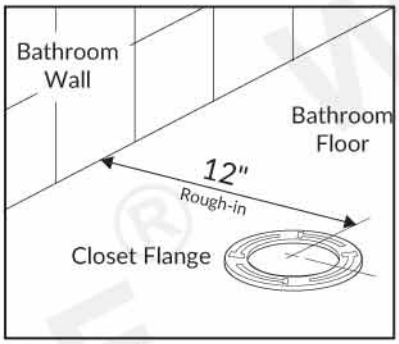

Figure 1

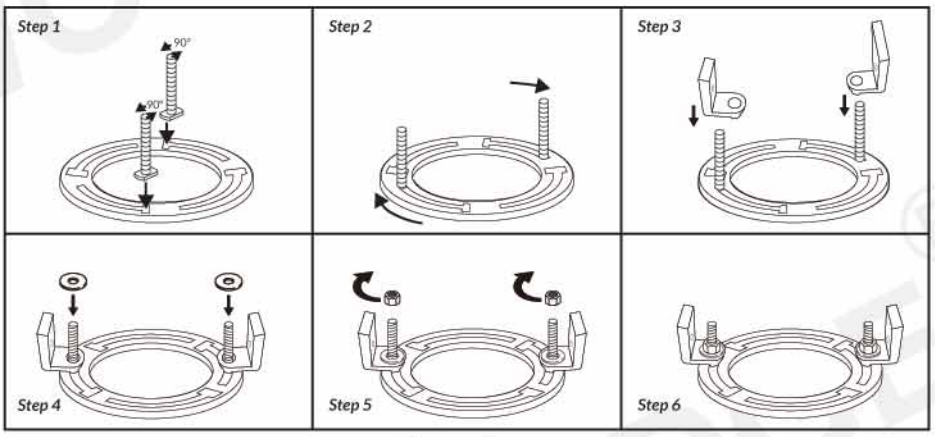

Figure 2

INSTALL WAX RING

Important: safety glasses must be worn by the installer and all bystanders.
Cover the floor with a soft-close blanket. Carefully turn the toilet on it's side or upside-down on the blanket with assistance of a second person. Install wax ring over the horn discharge located on the bottom of the toilet's bowl.
See Figure 3
Note: Ceramic is a fragile material. You must always cover the floor with a soft-cloth blanket if you want to put the toilet on the floor on any side other than the bottom of the toilet. If you do not cover the floor with a soft-close blanket contact of the toilet with the floor may and will cause minor or moderate scratches on the toilet's surface.

Always Use Soft-Cloth Blanket

Prior to installtion the wax ring must be kept in a room temperature between 70-75°F.

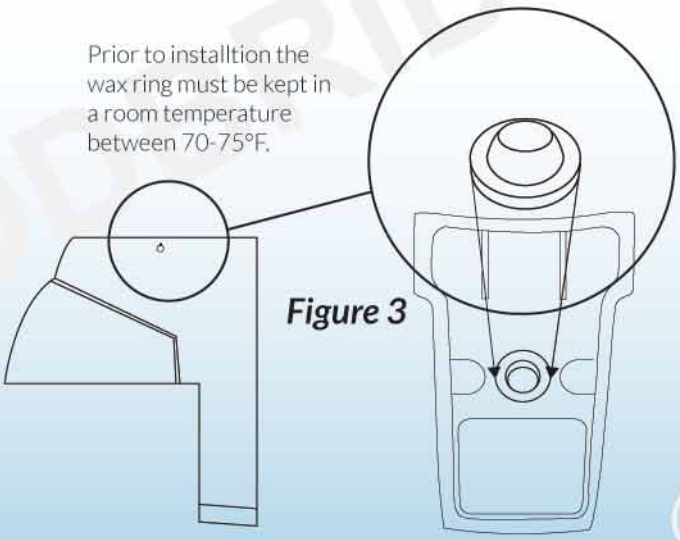

Figure 3

CAUTION! **2 PEOPLE ARE REQUIRED TO LIFT AND DURING ENTIRE INSTALLATION OF THIS PRODUCT**

INSTALL NEW TOILET

Step 1. Lift and carefully put the toilet over the closet flange so the closet bolts can go through the mounting holes in the toilet's base. Once the bowl is in the position press the bowl down with slight twisting motion in level position towards the floor. Apply your body weight to evenly compress the wax ring to create watertight seal. Make sure that the bowl is as leveled as possible to have a nice seal tight.

Do not rock the toilet back and forth and side to side as it may and will break a seal and you will need to replace the wax ring again and start the installation process over. *See Figure 4*

Step 2. Once the toilet is set and leveled install washers and nuts over the closet bolts. Tighten nuts. Do not overtighten the nuts. It may and will cause damage to the toilet's ceramic base.

See Figure 5

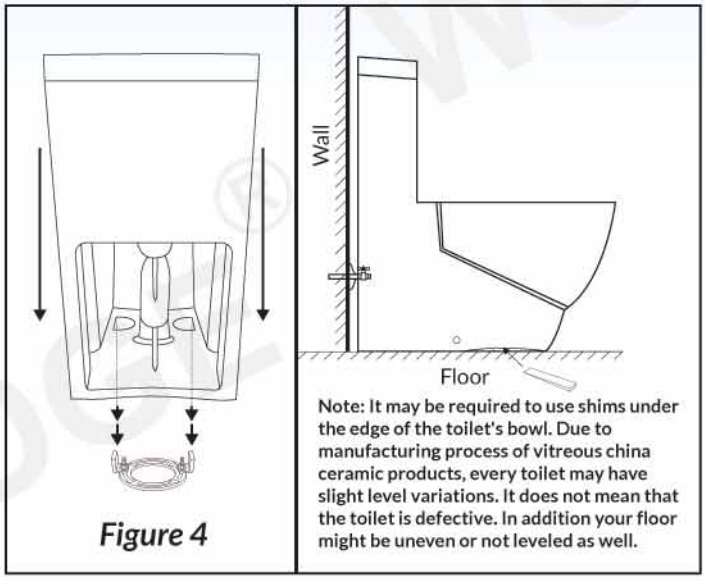

Figure 4

Note: It may be required to use shims under the edge of the toilet's bowl. Due to manufacturing process of vitreous china ceramic products, every toilet may have slight level variations. It does not mean that the toilet is defective. In addition your floor might be uneven or not leveled as well.

CONNECT TOILET'S TANK TO WATER SUPPLY LINE

Connect the water supply line between the tank and water shut-off valve using a toilet hose (not supplied). When connecting toilet hose tighten coupling nut to the tank by 1/4 turn beyond the hand tight.

⚠ Do not overtighten nut on the tank connection. It may and will cause water leakage.

Turn on valve on water supply line and allow tank to fill. Check all connections for leakages and tighten as needed.

Once tank is filled with water flush it 4-5 times to perform a test of the flushing system. At the same time check the bottom of the toilet for leaks to make sure that the wax ring is properly installed and sealed.

If there are no leaks you are ready finalize the installion. If any shims are installed at the bottom of the toilet's bowl you may trim them. Apply silicone around base of the toilet's. Allow 24 hours for silicone to dry before start using the toilet. *See Figure 6*

Important: Leaks may not occur during or right after the installation. Make sure to check for leaks every couple hours first day installed and and occasionally check it everyday for the next week to ensure that toilet is properly installed and no leaks occur. If any leaks occur immediately shut off the water supply line valve and contact your local plumber to fix all leaks.

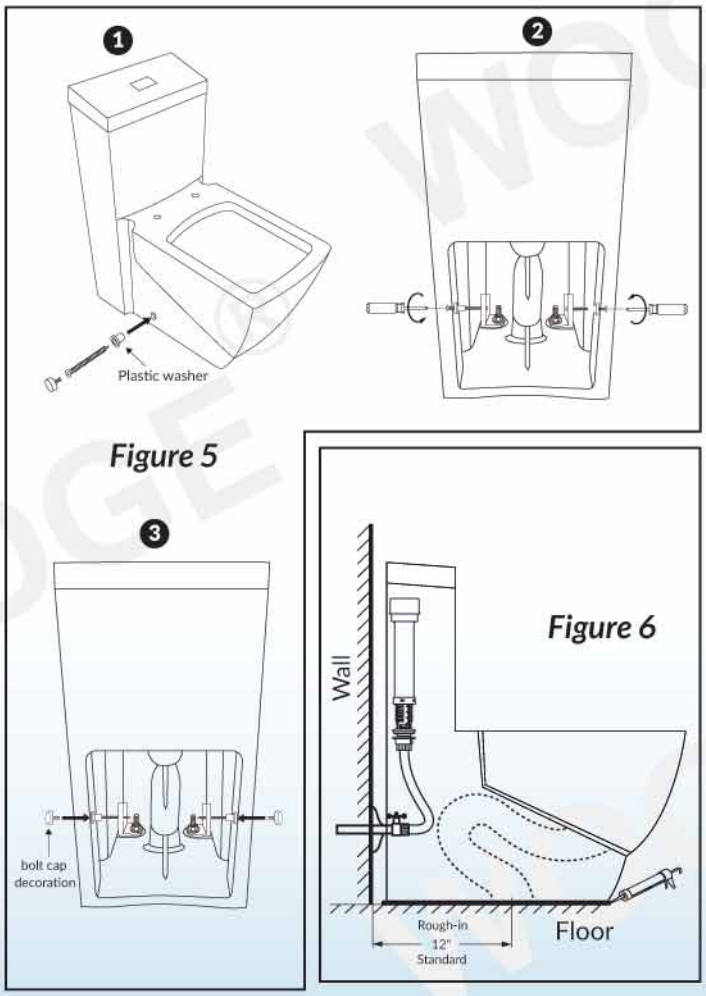

Figure 5

Figure 6

Important:

Under no circumstances We shall not be liable for any and all incidental damages sustained in connection with this product

Neither manufacture, nor distributor, nor retailer is responsible for water damage or flood caused due to use of this product.

Under no circumstances We shall not be liable for any and all fees, cost of installation/reinstallation/removal, subsequent damage or transportation in case of the product defect.

TOILET SEAT ADJUSTMENT

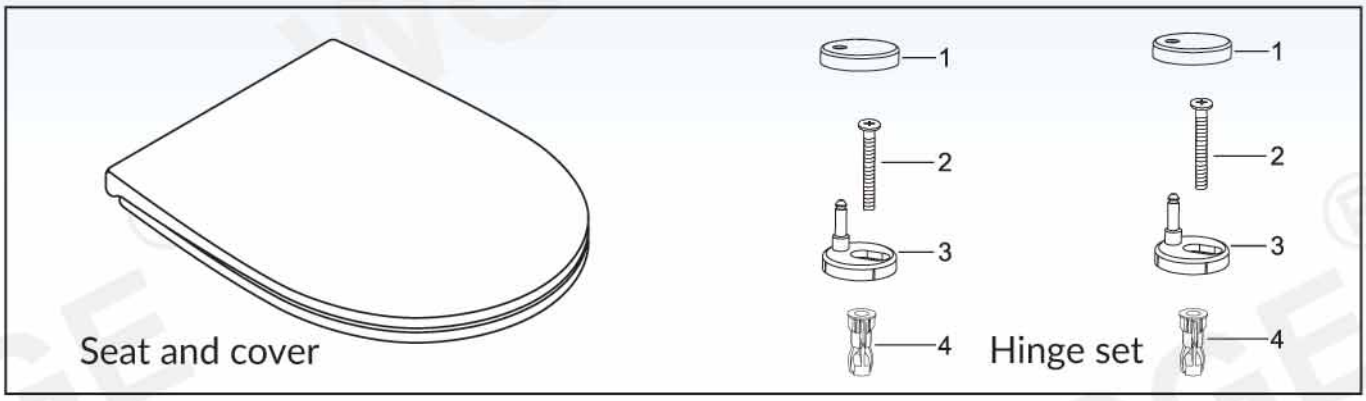

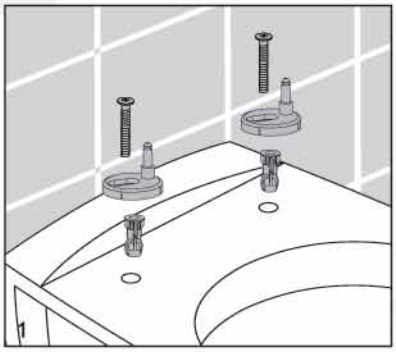

Insert the hinges into the toilet

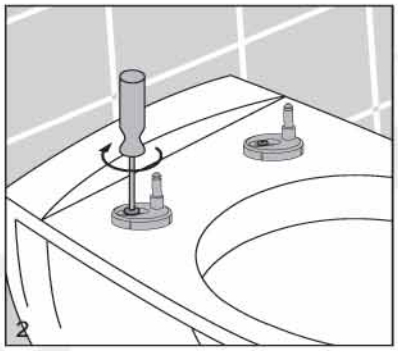

Tighten the screws of the hinges

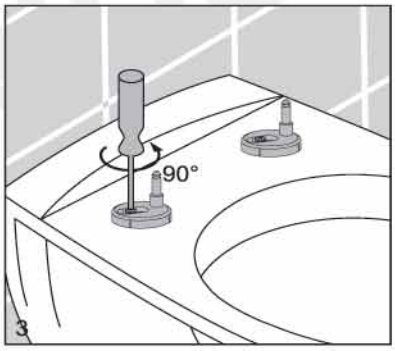

Untighten the screws a bit by turning them 90° right

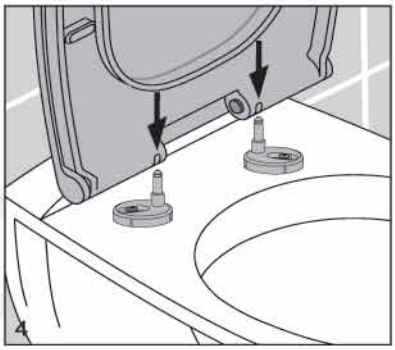

Clip on the toilet seat and cover

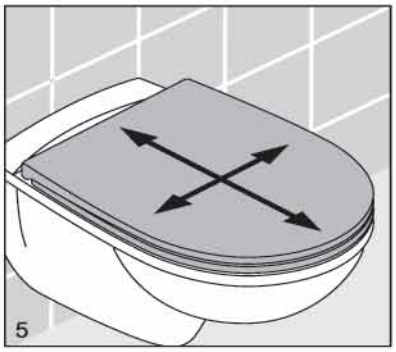

Aligh the toilet seat and cover with ceramic

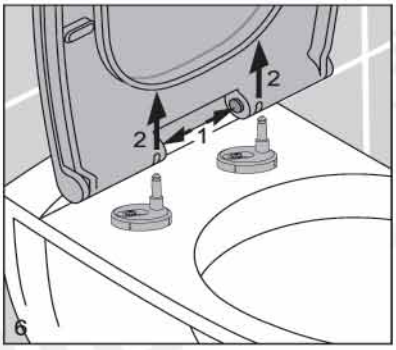

Take off the toilet seat and cover by pressing both pushbuttons

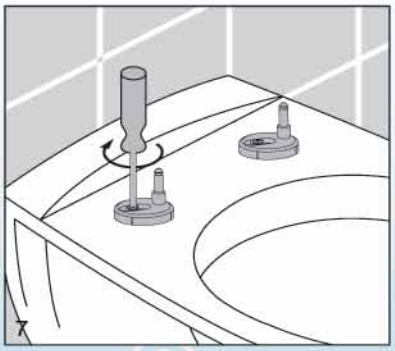

Tighten the screws

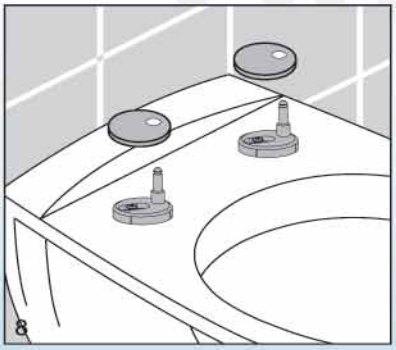

Place covering caps on the hinges

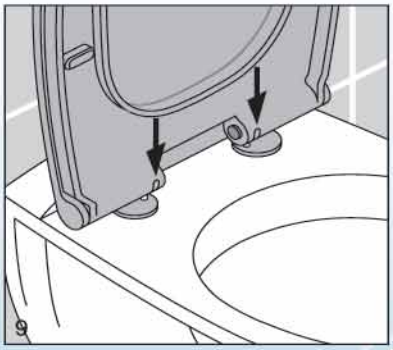

Clip on the toilet seat and cover

ADJUSTMENT & MAINTENANCE (DUAL FLUSH VALVE)

Important Note: Flush GPF amount is factory set. No additional adjustment is required. This page is for reference only. All adjustments are already made by manufacturer.

1. BASE INSTALLATION

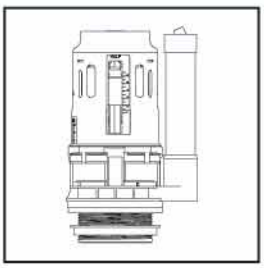

Check the dual flush valve and make sure that it does not have any damaged or missing parts

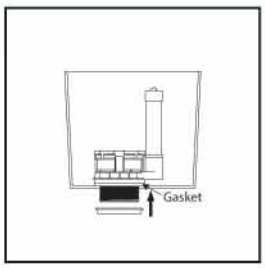

Install the base with the rubber gasket in the tank, turn the screw as illustrated to make sure there is no water leakage and no looseness

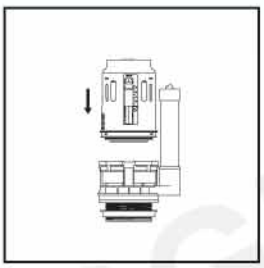

Install a body of the flush into the base and make sure they can be totated clockwise arbitrarily.

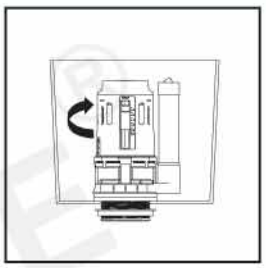

Rotate the valve clockwise to adjust its position inside of the toilet's tank

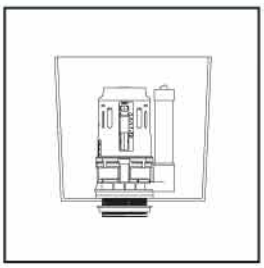

Install the sealing gasket

2. FLUSH VOLUME ADJUSTMENT

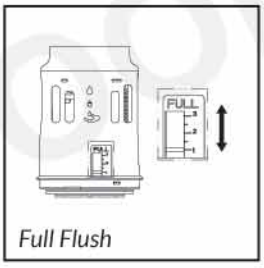

Full Flush

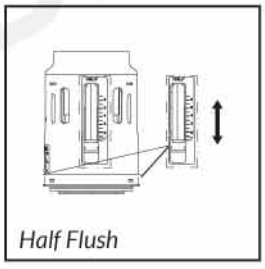

Half Flush

Full flush and half Flush range will decline when the button is moved upward from the bottom

3. PUSH BUTTON ADJUSTMENT

Check the completeness of the product before adjustment

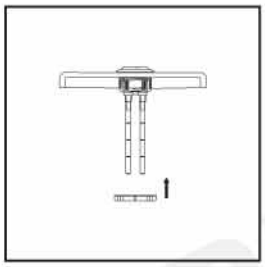

Take out the lock nut and insert the push button into the tank cover

Adjust the push button and lock the nut to make it well-fixed in the tank

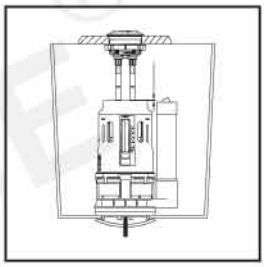

The distance between the rod tail and valve push button must be 1-2mm

4. REFILL TUBE ASSEMBLY

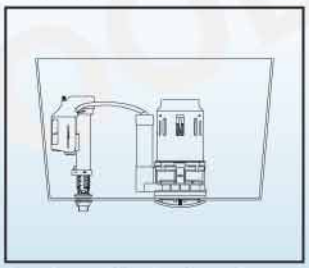

Put the refill tube into the white cap hole firmly

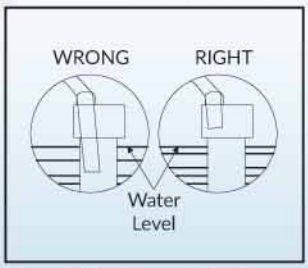

The refill tube can't be lower than the watersealing level

TROUBLESHOOTING

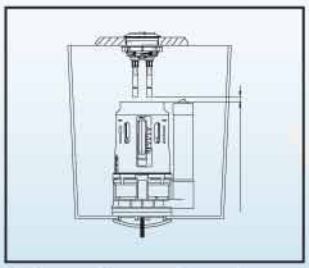

If the rod is too short, please re-adjust it (outward rotation).

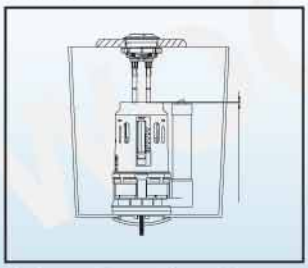

If the rod is too long please cut-off the extra length and re-adjust it.

ADJUSTMENT & MAINTENACE (FILL VALVE)

Important Note: Flush GPF amount is factory set. No additional adjustment is required. This page is for reference only.
All adjustments are already made by manufacturer.

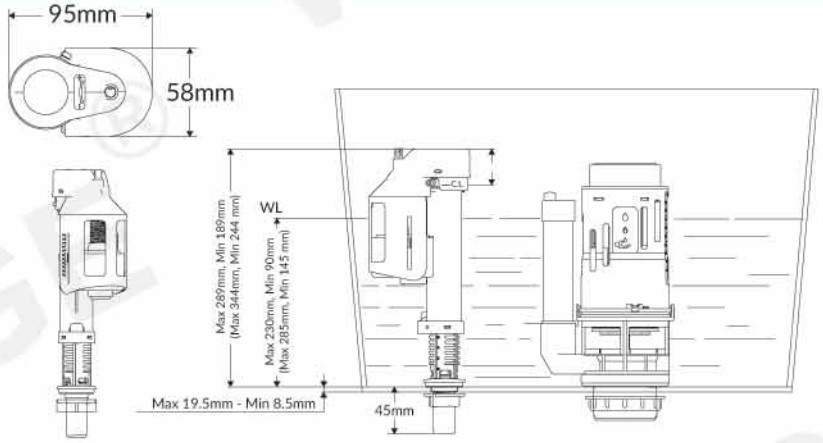

Instructions:
When valve installed, the critical level mark on fill valve (identified by C.L. mark on valve body) shoud be at least 1" above top of the over flow pipe.

Required:
- Water temperature: 36-112°F

Important:

Under no circumstances seller shall not be liable for any and all incidental damages sustained in connection with this product

Neither manufacture, nor distributor, nor retailer is responsible for water damage or flood caused due to use of this product.

Under no circumstances seller shall not be liable for any and all fees, cost of installation/reinstallation/removal, subsequent damage or transportation in case of the product defect

IMPORTANT: Do not use or drop any chlorine or any other chemicals. Use of chemical products will result in damage to the fill valve and flush valve components and may cause flood and property damage. Do not overtighten bolts/nuts as it may and will cause damage to the toilet parts and componets.

1. PREPARATION

Remove the worn-out fittings and clean your tank prior to the installation of the new ones. There might be a lot of impurities in your tank that may cause damage to the new parts if you do not clean them out. The tank must be absolutely clean prior to installation.

2. WATER LEVEL ADJUSTMENT

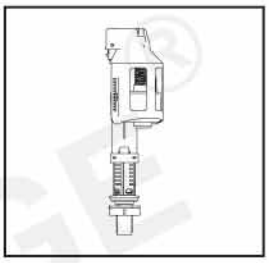

Check the fill valve and make sure that it does not have any damaged or missing parts

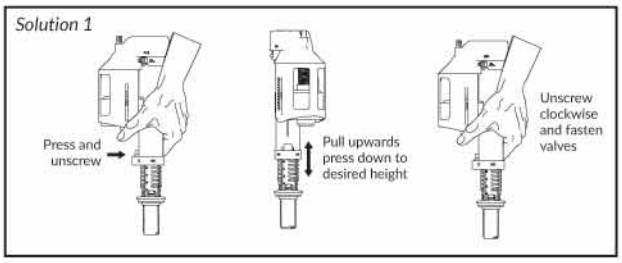

1. Press buckle and unscrew.
2. Pull the valve upwards or press down to desired height.
3. Unscrew the valve body and fasten the buckle

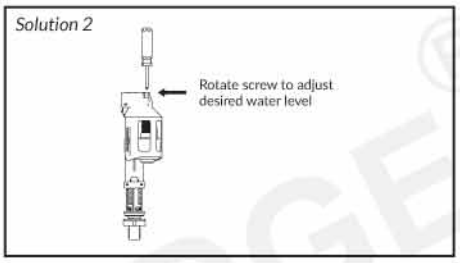

Rotating screw, rise or lower the water level to adjust water level to suitable position (water volume will gradually increase when the adjuster is moved upward from the bottom.)

3. FILL VALVE INSTALLATION

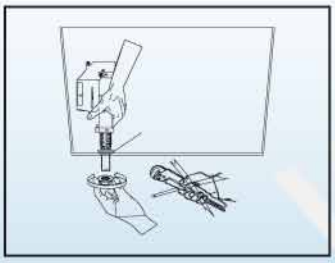

Install the valve into tank. Do not use any wrench tools. Fasten with hand only.

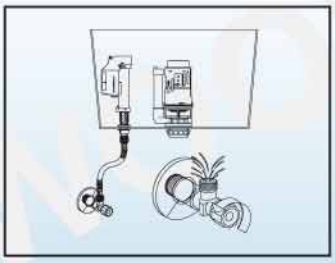

Connect water supply to the fill valve. Turn on water.

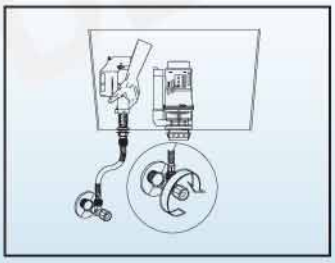

Turn off water supply valve before height adjustment of the toilet's fill valve.

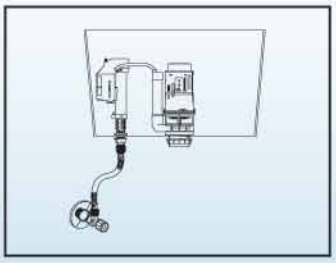

Put the refill tube into the white cap hole firmly.

CLEANING & TROUBLESHOOTING (FILL VALVE)

FILL VALVE CLEANING

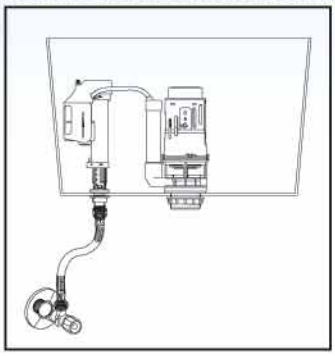

Shut off water supply line before filter cleaning.

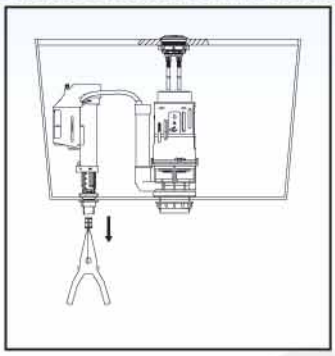

Carefully, take out the filter from inlet by using pliers.

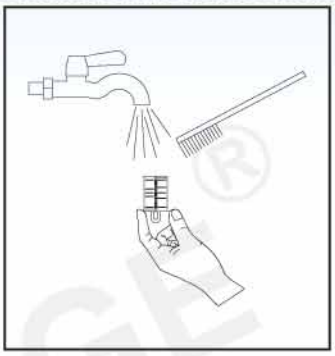

Use water to wash and clean the filter and adapter from any debris.

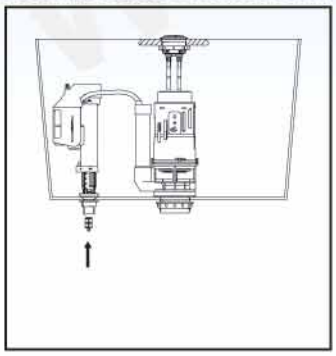

Re-install the filter and re-connect the water supply line.

TROUBLESHOOTING

Issue	Cause	Solution
Water level is too high or too low	Improper water level adjustment	Adjust the water level
Fill valve fails to shut off or fails to fill the water into the toilet's tank	1. Inlet valve switch is turned on. 2. Inlet valve float crashed against ceramic wall 3. Filter screen is clogged due to dirty water 4. Improper refill hose installation	1. Turn on inlet valve switch 2. Adjust inlet valve position 3. Clean the filter screen 4. Install refill hose correctly (see diagram on the right)

Solution #4

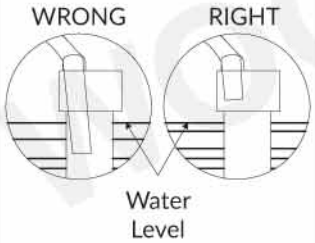

MAINTENANCE & CARE

Use soft sponges or soft-cloths to clean the surface. Always rinse thoroughly any cleaning solutions immediately after cleaning. Do not any chemical remain on the surface for extended periods of time.

IMPORTANT!

DO NOT USE: Abrasive cleaners such as: acid, ammonia, bleach, and simmilar solutions. Use of such solutions may cause corrosion, finish peeling, and/or dull the surface.

DO NOT USE: Abrasive sponges or cloth. Never use steel, wool, or wired brushes that will permanently scratch the surface.

FILL/FLUSH VALVES MAINTENANCE & CARE

Do not pour any mounts of chlorine or any other chemicals into the tank. Use of chemical products will result in damage to the fill valve and flush valve components and may cause flood and property damage

Note: fill and flush valves are maintenance free. No maintenance is required.

Retain these installation instructions for future reference!

Thank you for using WoodBridge products!

Customer Service Phone: 562-774-2284. (Monday - Friday 9 AM - 5 PM Pacific Time)

Or Email: help.woodbridge@gmail.com

WOODBRIDGE®

NOTES

INSTALLER INFORMATION

DATE OF INSTALL:

INSTALLER'S NAME:

PLUMBER: ☐ **CONTRACTOR:** ☐

LICENSE #: