# WOODBRIDGE®
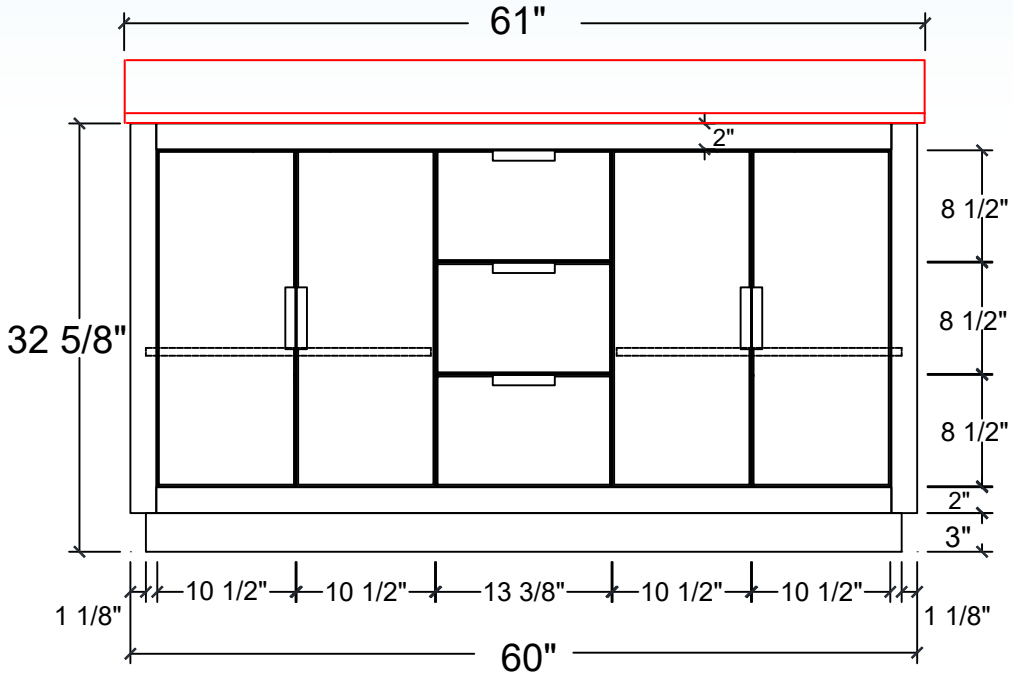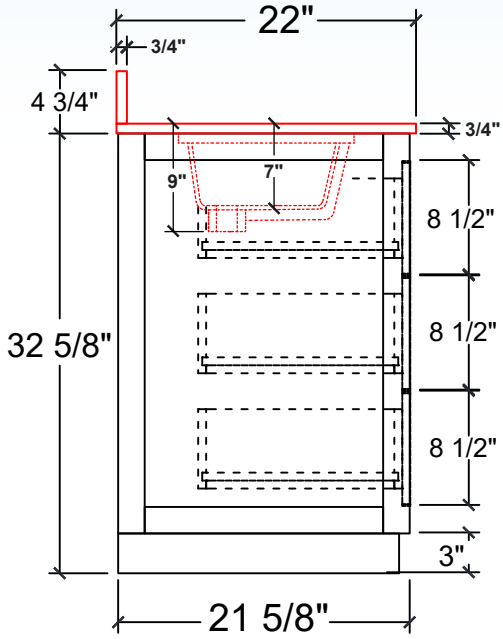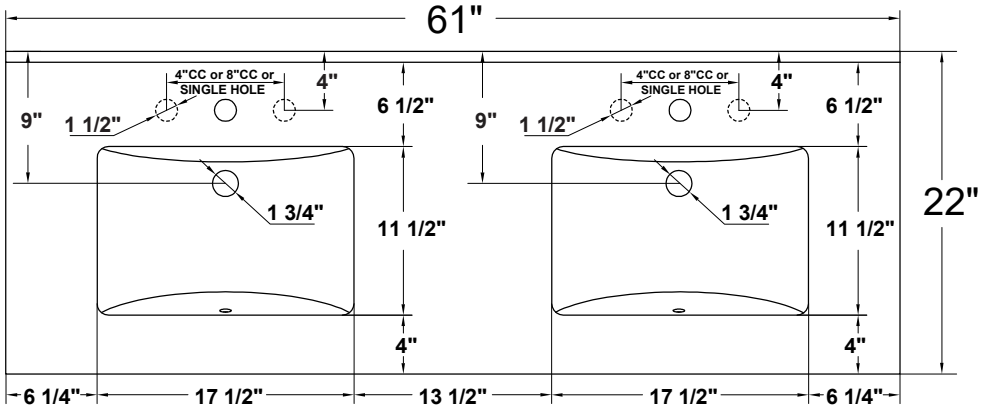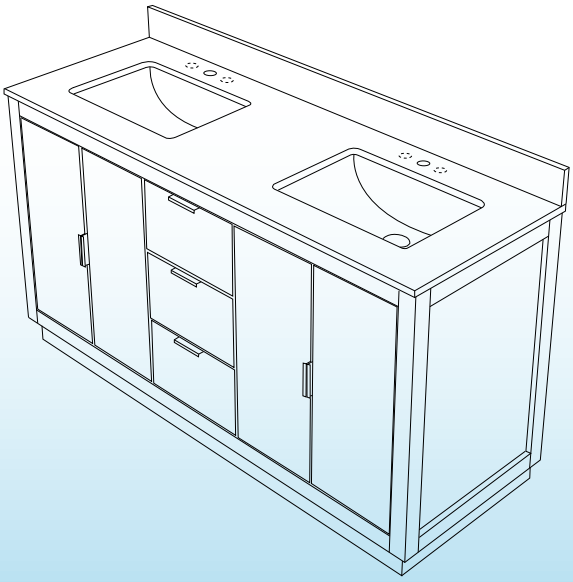
## Venice-6021