WOODBRIDGE®
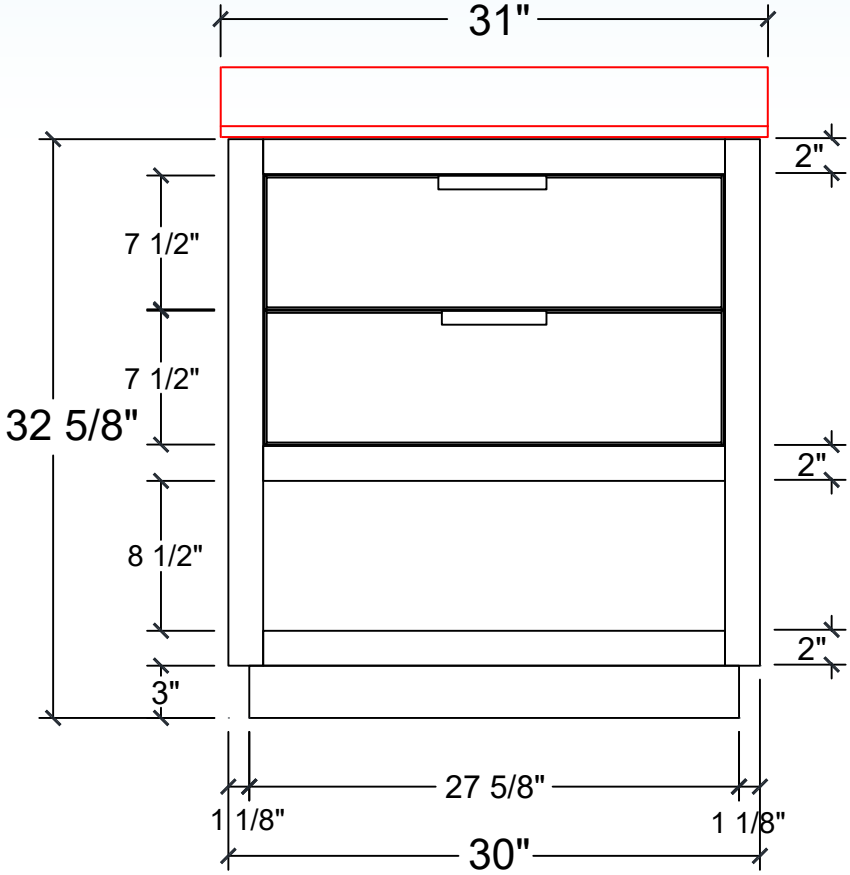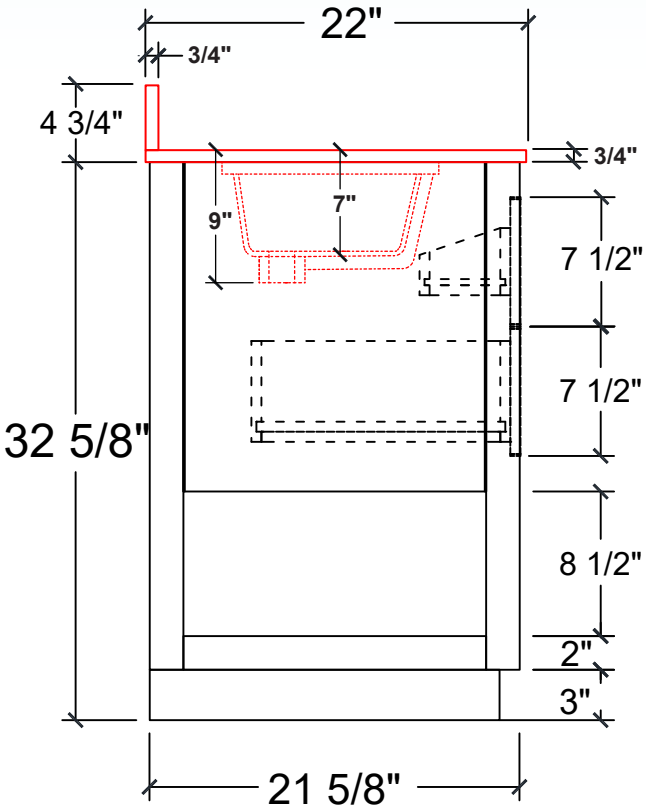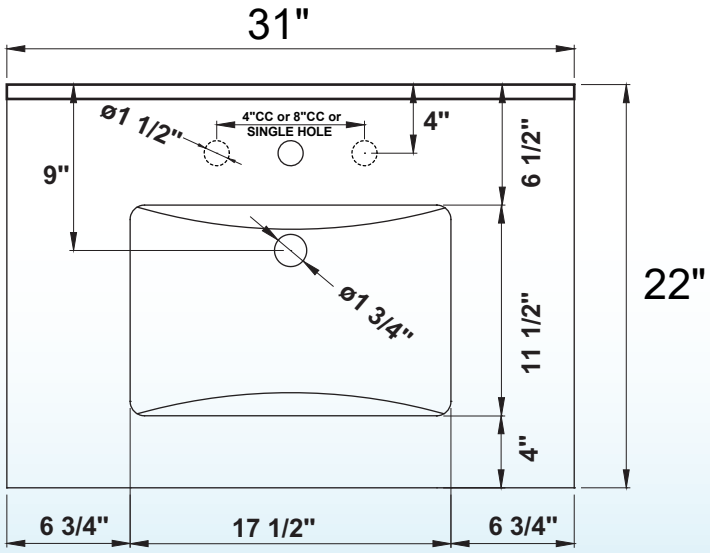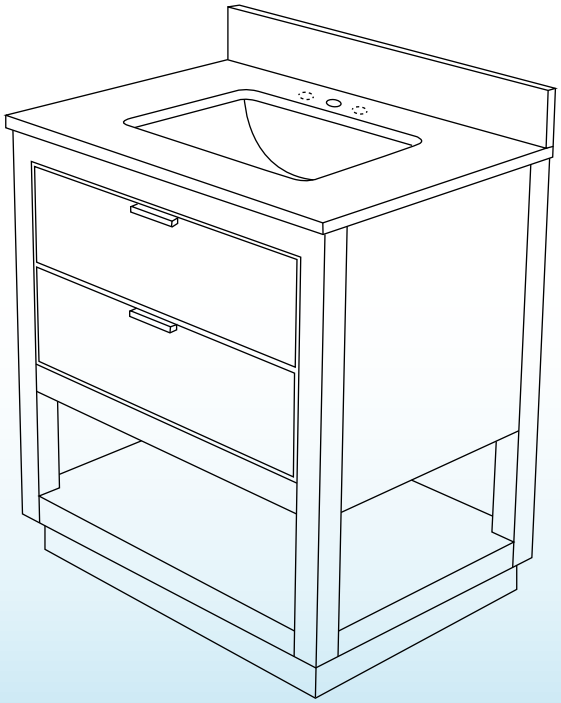
Venice-3021