WOODBRIDGE®
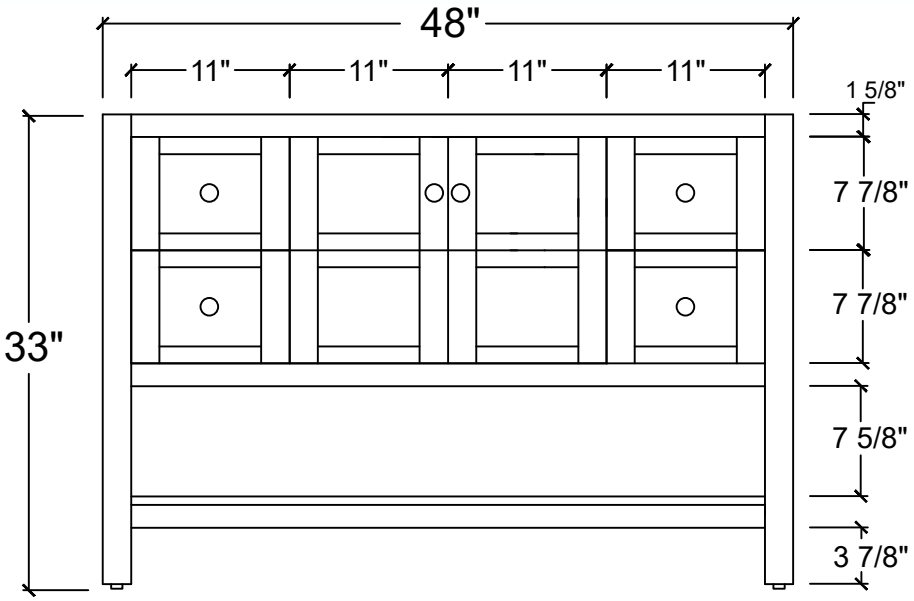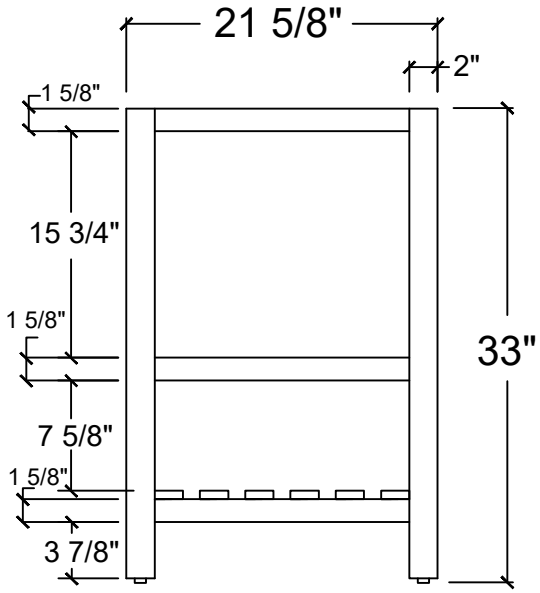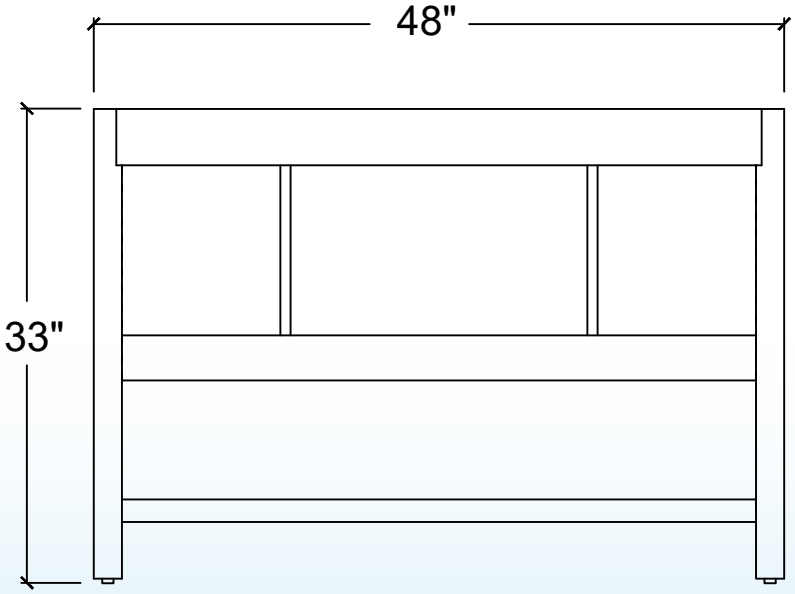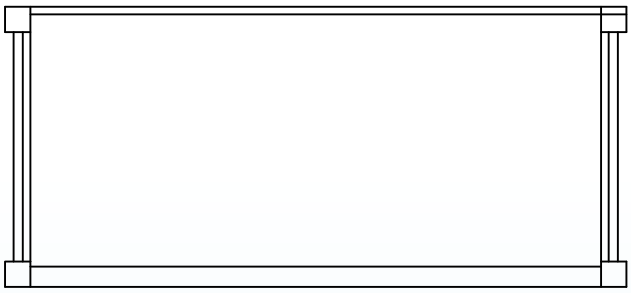
Sydney-4821